GLASS RELATE Ltd.

Technical Information Sheet

Copyright 2009

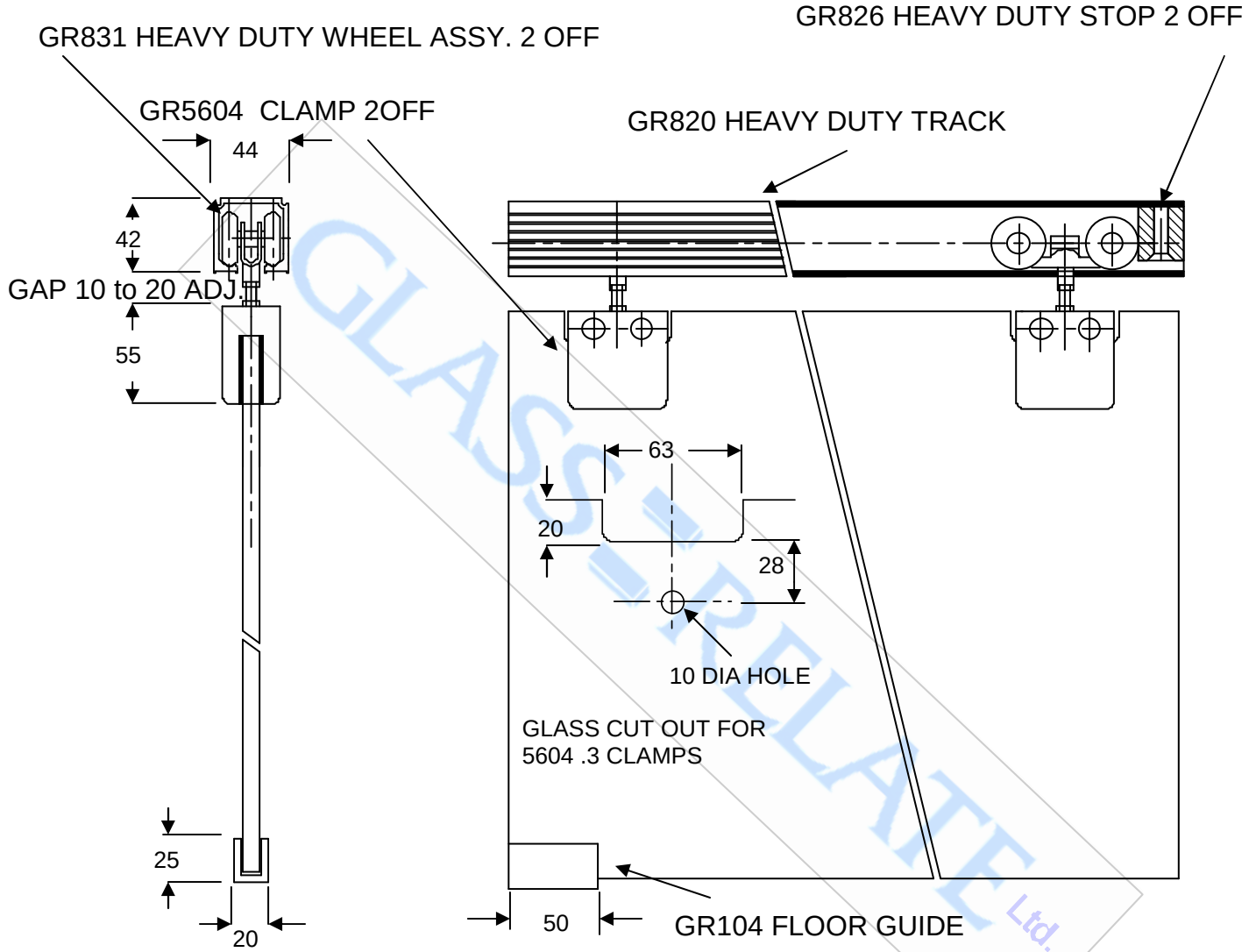

HEAVY DUTY SLIDING DOOR SET UP

USING GR5604.3 CLAMPS

MAX LOAD PER DOOR = 50 KG

21 Soljan Drive,Henderson, Auckland, New Zealand.
P.O. Box 104-224 Linclon North Henderson 0654
E Mail. hardware@glassrelate.co.nz
Free Phone 0800 800 075
Website:www.glassrelate.co.nz